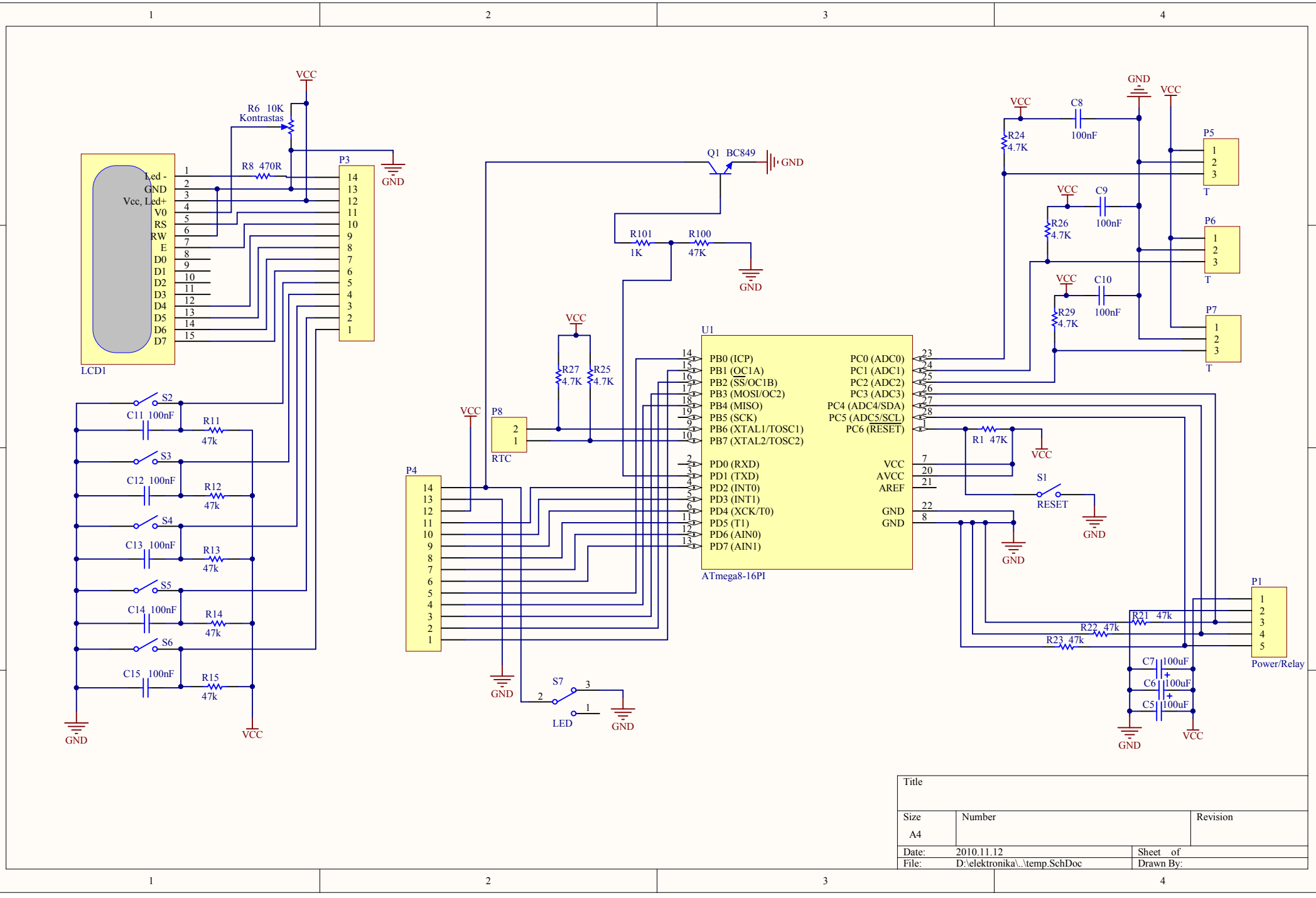

Title		
Size A4	Number	Revision
Date: 2010.11.12		Sheet of
File: D:\elektronika\..\temp.SchDoc		Drawn By:

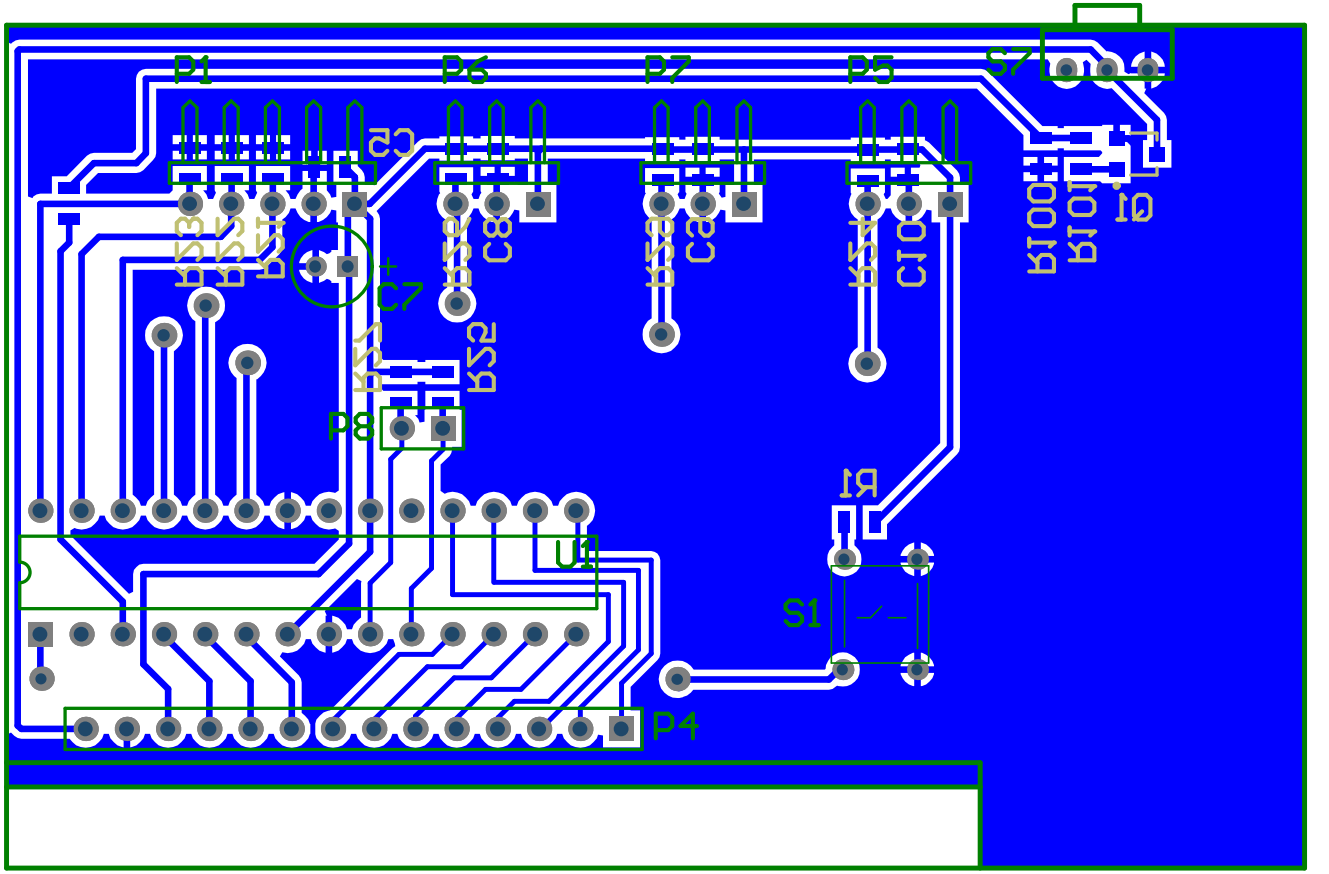
P1
P6
P7
P5
S7
C2
C8
C9
C10
R10
R11
Q1
R3
R4
C7
R5
R2
P8
R1
U1
S1
P4

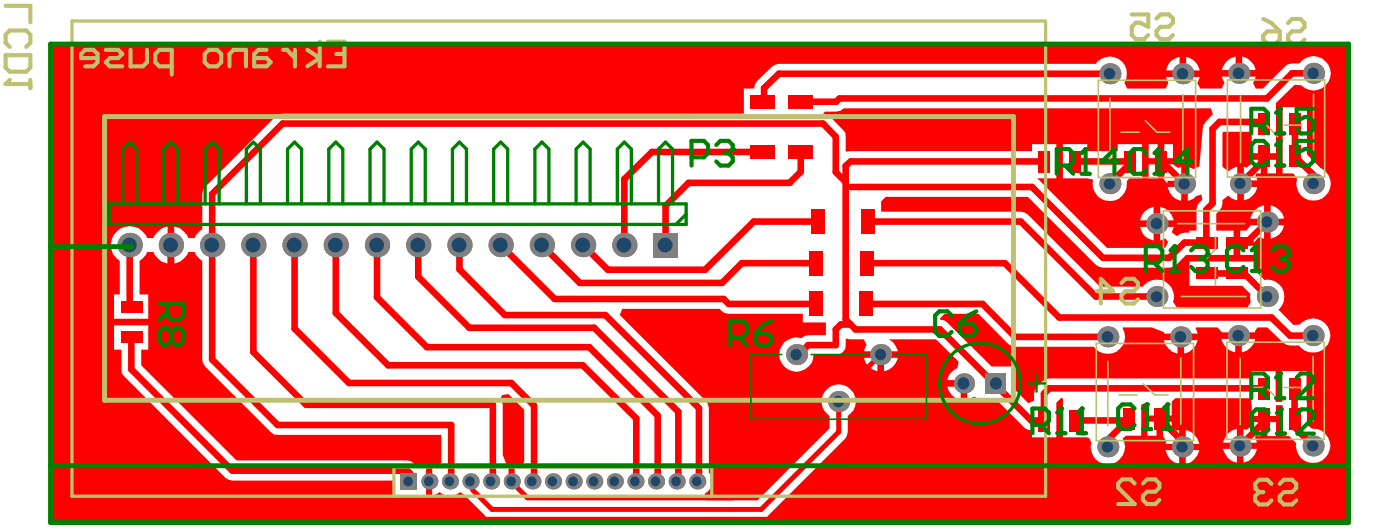
LCD1
Ekranu pulse
P3
R8
R6
C6
R14
C14
R15
C15
R13
C13
R12
C12
R11
C11
S1
S2
S3
S4
S5
S6